All rights strictly reserved. Reproduction or issue to third parties in any form whatever is not permitted without written authority from the proprietor. Property of Rosenberger Hochfrequenztechnik

fuer diese technische Unterlage behalten wir uns alle Rechte vor (DIN 34)

Leiterplatten-Layout
PCB layout
B 32

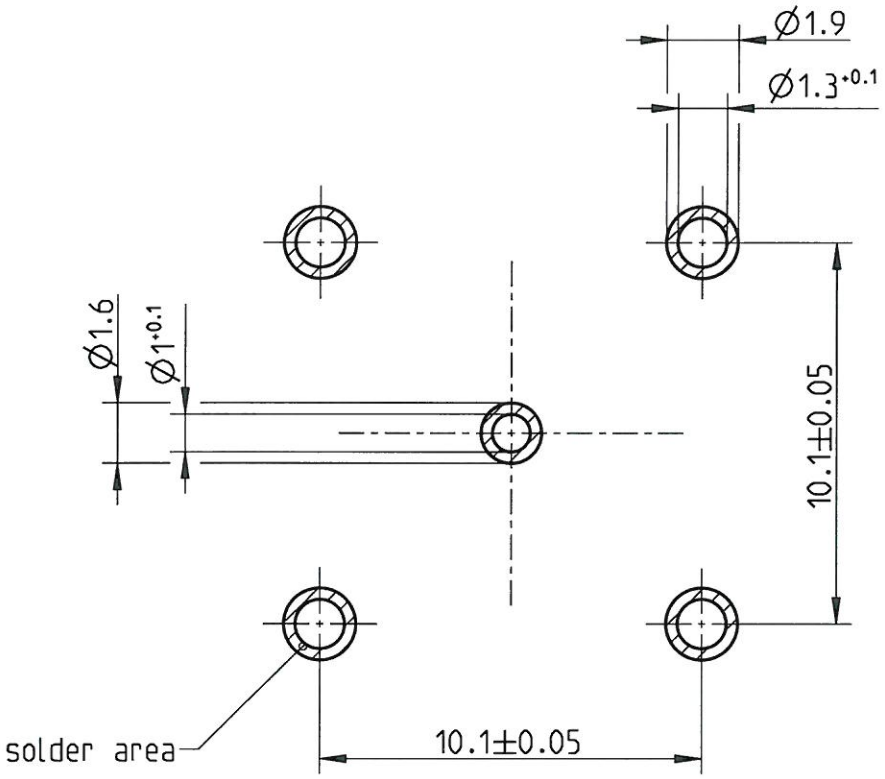

A wide variety of transmissionline topologies and pcb-parameters like permittivity, substrate thickness, and board-stackup are applied by customers. These parameters have a strong impact on the high frequency performance of the mounted connector.
Please note, that the given layout is not optimised to fit all of the possible board configurations regarding RF-performance, it represents a recommendation for optimum solderability of the connector.
In order to guarantee optimum high frequency properties of the connector, an RF-analysis of the connector to board transition is recommended.

Formblatt: TCC_FB_05_PE_A4_Einzelteil
Pfad: I:\Proe-config\Rahmen\
Datei: A4_EINZELTEIL_EOB.FRM
Version: 1.1

-METRIC-

ISO-Projektion
Methode E

Rosenberger Hochfrequenztechnik 84526 Tittmoning Pro/ENGINEER	general tolerance ISO 2768 m-H	RN 006-01 dimensions <0,5 and symmetry	scale: 5:1 weight[g]: surface[mm²]: material:

	date	name
drawn	15.02.2001	A_Nobis
check.	30.3.06	[signature]
appr.	30.03.06	Krautenbac

dimensioning incl. finish

title: Leiterplatten-Layout
PCB layout

rev.	change-no	name	date
e00	06-0194	S_Krautenbac	24.03.2006
d00	02-0124	A_Nobis	06.10.2003
c00	01-0266	V_Spitzauer	13.06.2001

distribution to:	FE	AZ	QSM	RMT	.
	X	.	.	.	.

drawing-no..: MB_32

sheet: 1 of: 1

remarks: .