All rights strictly reserved. Reproduction or issue to third parties in any form whatever is not permitted without written authority from the proprietor. Property of Rosenberger Hochfrequenztechnik.

fuer diese technische Unterlage behalten wir uns alle Rechte vor (DIN 34)

Leiterplatten-Layout
PCB layout
B 127

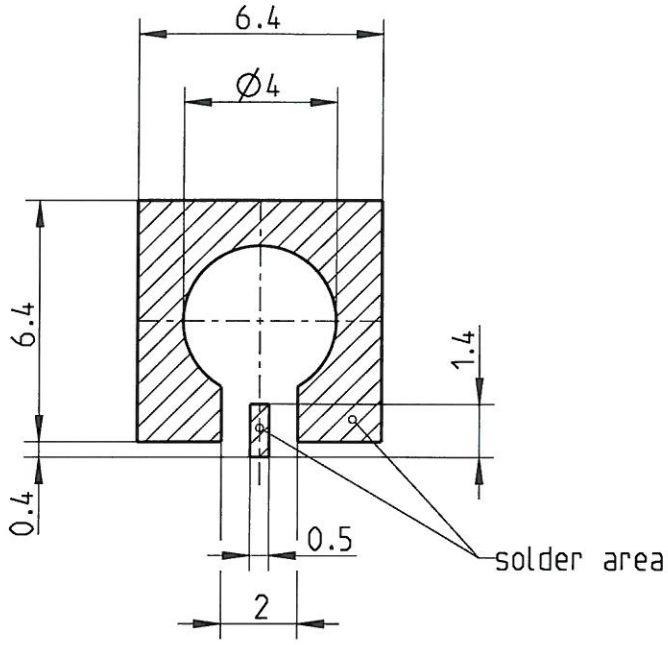

A wide variety of transmissionline topologies and pcb-parameters like permittivity, substrate thickness, and board-stackup are applied by customers. These parameters have a strong impact on the high frequency performance of the mounted connector.
Please note, that the given layout is not optimised to fit all of the possible board configurations regarding RF-performance, it represents a recommendation for optimum solderability of the connector.
In order to guarantee optimum high frequency properties of the connector, an RF-analysis of the connector to board transition is recommended.

Formblatt: TCC_FB_05_PE_A4_Einzelteil
Pfad: I:\Proe-config\Rahmen\
Datei: A4_EINZELTEIL_EDB.FRM
Version: 1.0

Rosenberger Hochfrequenztechnik 84526 Tittmoning Pro/ENGINEER				general tolerance ISO 2768 m-H	RN 006-01 dimensions <0,5 and symmetry				scale: 5:1	weight[g]: surface[mm²]:
									material:	
					date	name			title:	
				drawn	14.11.2005	A_Nobis			Leiterplatten-Layout *PCB layout*	
				check.	30.11.05	[signature]				
				appr.	2/12/05	[signature]				
				dimensioning incl. finish						
									part-no..: MB_127	sheet: 1
a00	05-0615	A_Nobis	15.11.2005	distribution to:	FE	AZ	QSM	RMT	.	of: 1
rev.	change-no	name	date		X	.	.	.	.	remarks: .

ISO-Projektion Methode E -METRIC-