All rights strictly reserved. Reproduction or issue to third parties without written authority from the proprietor. Property of Rosenberger Hochfrequenztechnik.

Montageanleitung: MA_19G Serie: SMP

Fuer Stecker 19S181-5H0

Montagebohrung:

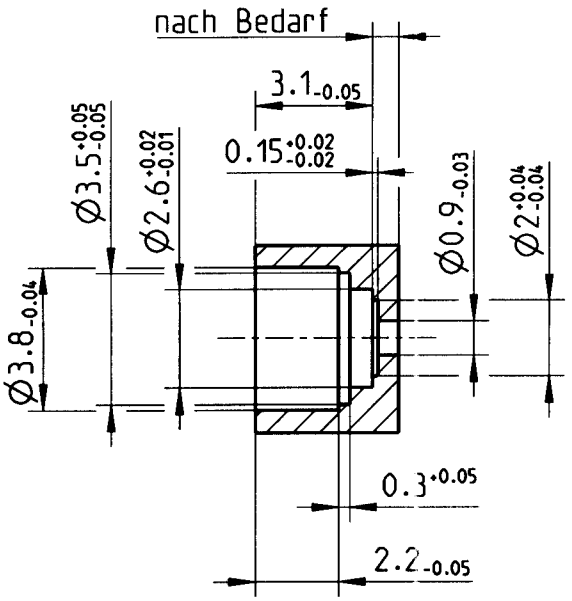

Aussenleiter buendig zu Gehaeuse

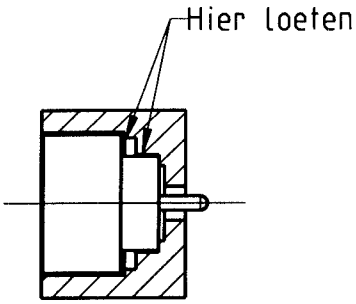

Aussenleiter vorstehend zum Gehaeuse

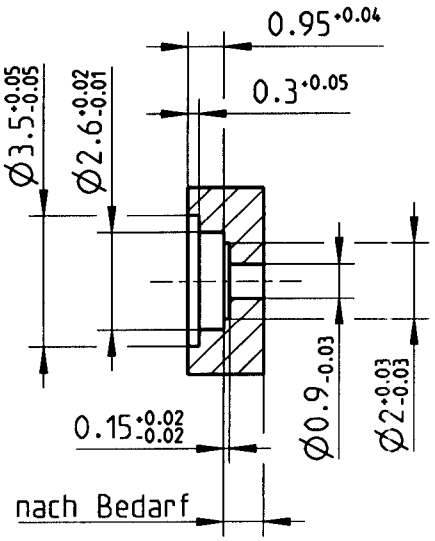

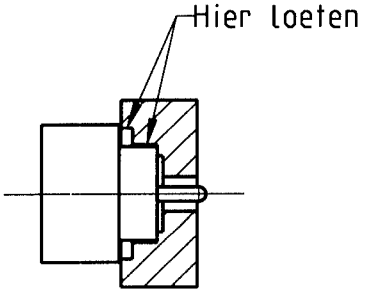

Installation:

Stecker in vorbereitetes Gehaeuse loeten
Maximale Loettemperatur 350°C
Wir empfehlen ein Loetformteil zu verwenden

	date	name	scale:
drawn	12.02.2003	M_Schmid	5:1
check.	12.2.03		sheet:
appr.	13.2.03		1/2

Rosenberger
Hochfrequenztechnik
84526 Tittmoning Pro/ENGINEER

rev.	change-no	name	date
a00	03-s034	M_Schmid	12.02.2003

Werkzeuge:

Loetwerkzeug	....
....	....
....	....
....	....
....	....
....	....
....	....

fuer diese technische Unterlage behalten wir uns alle Rechte vor (DIN 34)

-METRIC-

ISO-Projektion Methode E

All rights strictly reserved. Reproduction or issue to third parties in any form whatever is not permitted without written authority from the proprietor. Property of Rosenberger Hochfrequenztechnik.

fuer diese technische Unterlage behalten wir uns alle Rechte vor (DIN 34)

Assembly Instruction: MA_19G Series: SMP

for connector 19S181-5H0

mounting hole:

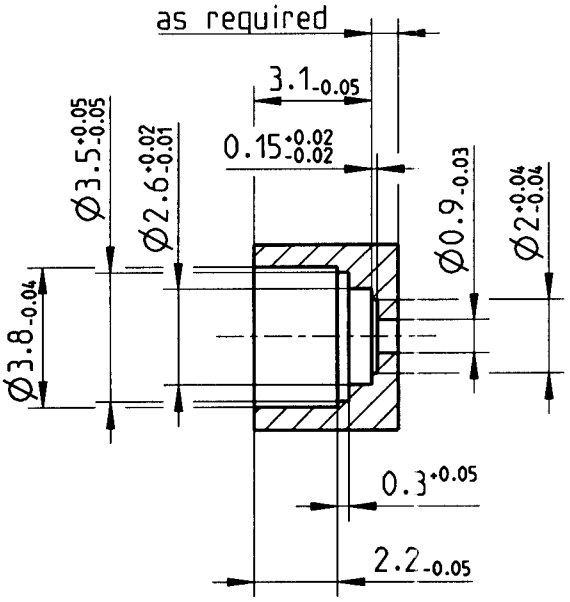

outer contact flush to housing

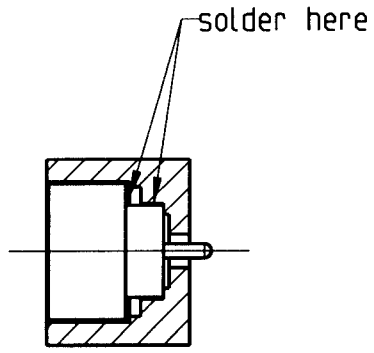

outer contact protruding from housing

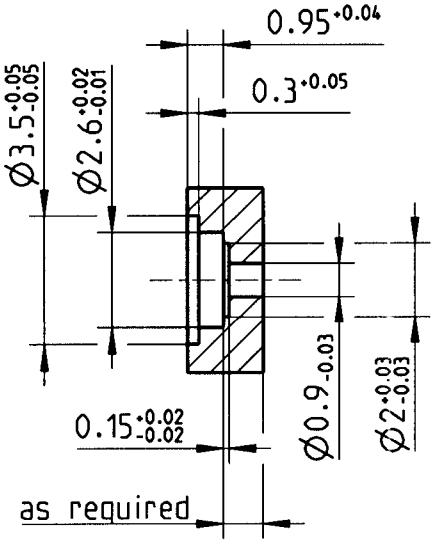

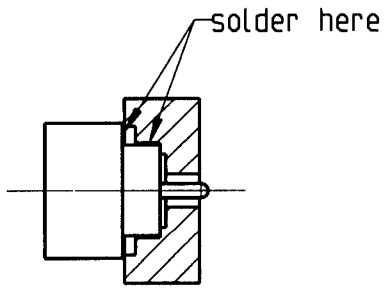

Installation:

Solder connector into machined panel
Maximum solder temperature 350 °C
We recommend to use a solder shape

*) For the crimping dia part-nr. please consult the relevant customer drawing.

					date	name	scale:
				drawn	12.02.2003	M_Schmid	1:1
				check.	12.2.03	König	sheet:
				appr.	13.2.03	[illegible]	2/2
a00	03-s034	M_Schmid	12.02.2003				
rev.	change-no	name	date				

Tools:

Soldering tool	....
	....
....	....
....	....
....	....
....	....
....	....

Rosenberger
Hochfrequenztechnik
84526 Tittmoning Pro/ENGINEER

ISO-Projektion Methode E -METRIC-

A4_MONTAGE_E_EDB.FRM Koni 2003-01-11