Technical Data Sheet		Rosenberger
HPK	STRAIGHT PLUG	**H4K135-W10016B1-YY**

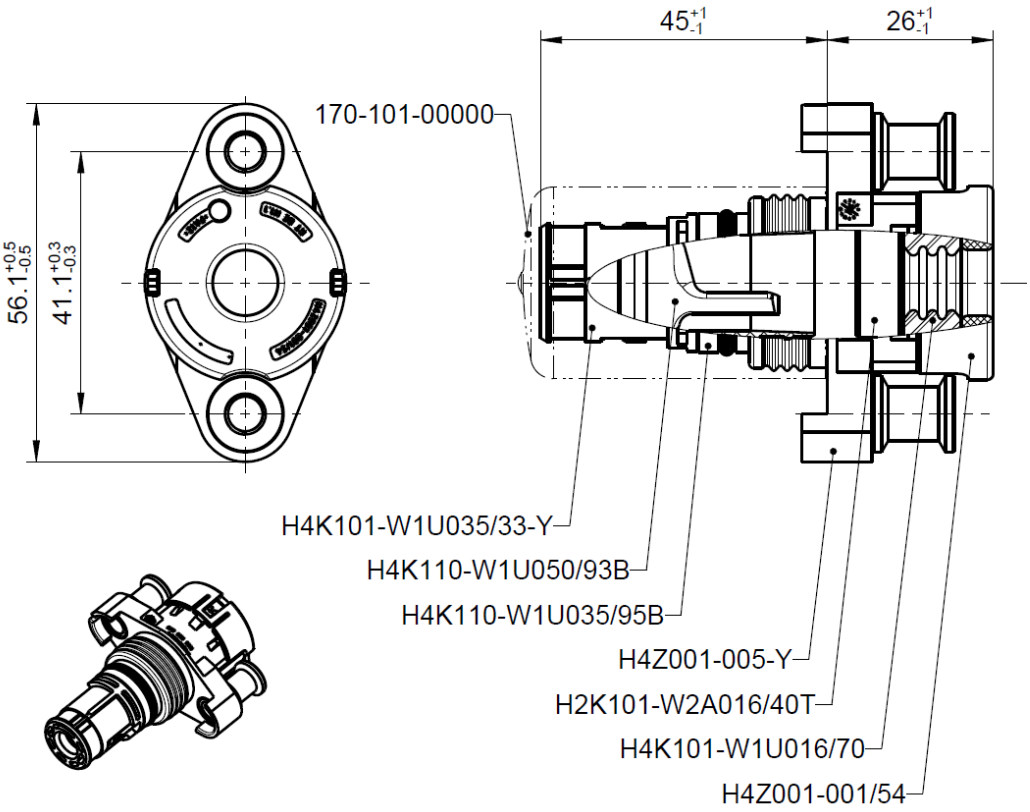

Interface

According to	RN_084-01

Documents

Assembly instruction	MA_HV0104
Process instruction (ultrasonic welding)	RN_087-01
Process data sheet (ultrasonic welding)	RN_087-14

Material and plating

Connector parts	**Material**	**Plating / Colour**
Outer contact	Brass	Ag, min. 0,5µm
Contact spring (shielding)	Copper	Ag, min. 0,5µm
Center contact	Copper	Ag, min. 3µm
Contact spring (power)	Copper	Ag, min. 3µm
Crimp sleeve	Brass	Sn, min. 3µm
Press in sleeve	Brass	Ni, min. 3µm
Insulator	PA10 GF30	red; black; waterblue
Housing	PA12 GF30	orange
Protective cover	PA12 GF30	orange
Seal (Housing)	Silicon	red, oil exudating
Seal (Cable)	Silicon	gray, oil exudating
Protective cap	EPDM	black

Dieses Dokument ist urheberrechtlich geschützt ● This document is protected by copyright ● Rosenberger Hochfrequenztechnik GmbH & Co. KG

Rosenberger Hochfrequenztechnik GmbH & Co. KG
P.O.Box 1260 D-84526 Tittmoning Germany
www.rosenberger.de

Tel. : +49 8684 18-0
Email : info@rosenberger.de

Electrical data

Insulation resistance	≥ 200 MΩ / 1000 V_DC
Voltage class	B 60 V_DC < U ≤ 1500 V_DC 25 V_AC < U ≤ 1000 V_AC
Contact resistance (Current)	≤ 0,4 mΩ
Contact resistance (EMV)	≤ 1 mΩ
Design acc. to DIN EN 60664-1 (2008-1)	
Pollution degree	2
Type of isolation	Basic Isolation
Max. Altitude	5500m above sea level
Working voltage	1000 V_DC
Test voltage	3200 V_DC (at max. altitude 2000m above sea level)
Rated surge voltage	2500 V_DC
Ampacity ***According to DINEN60512-5-2***	see chart

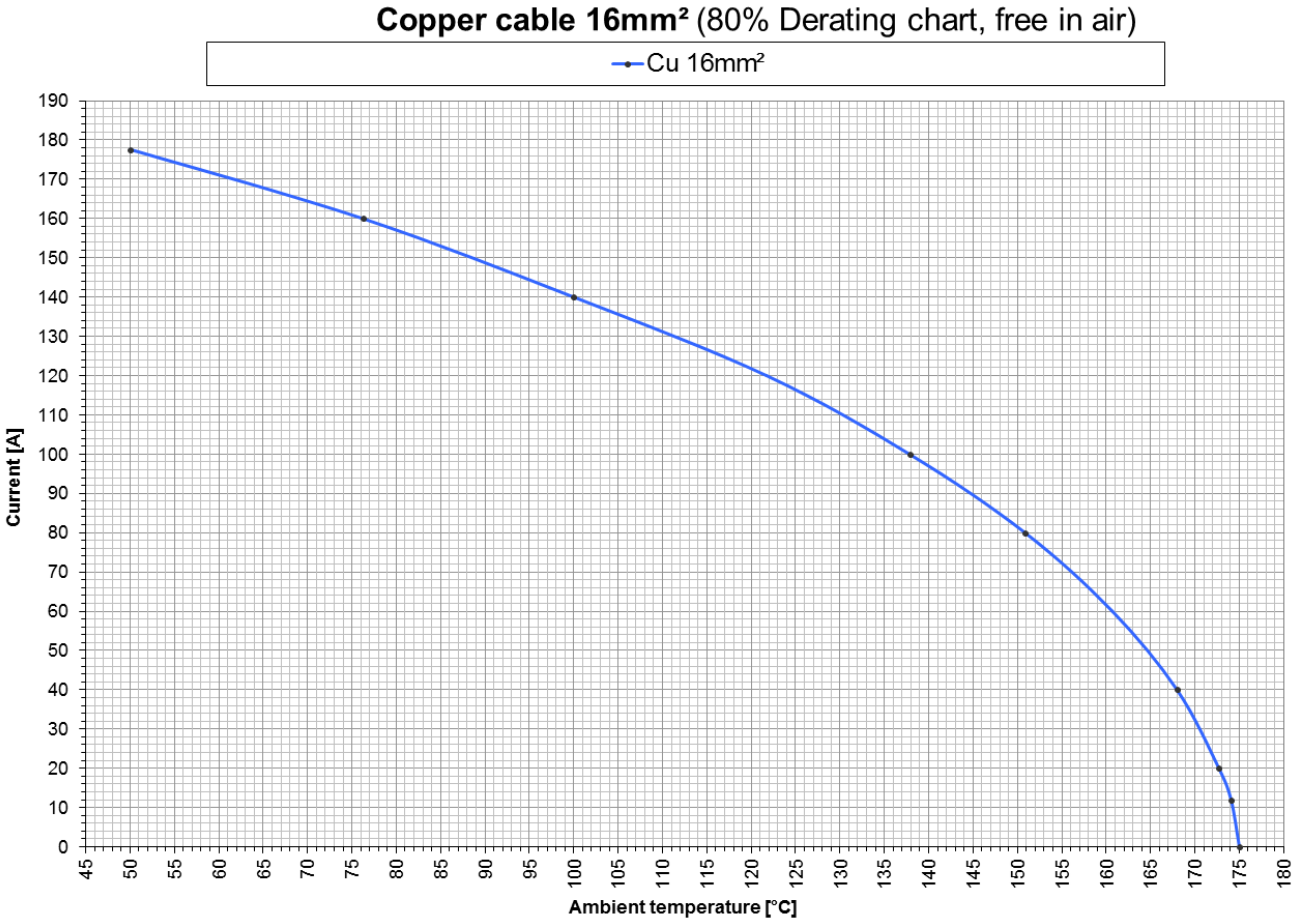

EMI (shielding effectiveness)	70 dB (10 kHz - 5 MHz) 65 dB (5 MHz - 500 MHz)
High voltage interlock (HVIL)	No

Dieses Dokument ist urheberrechtlich geschützt ● This document is protected by copyright ● Rosenberger Hochfrequenztechnik GmbH & Co. KG

Rosenberger Hochfrequenztechnik GmbH & Co. KG
P.O.Box 1260 D-84526 Tittmoning Germany
www.rosenberger.de

Tel. : +49 8684 18-0
Email : info@rosenberger.de

Mechanical data

Mating cycles	≥ 50
Engagement force	≤ 75 N
Coding efficiency	≥ 300 N
Cable connection angle	180°
IP class (mated)	IP6K9K / IPX8 / IPXXD
IP class (unmated)	IPXXB
Vibration class	LV214 (2010-04) PG17-II (Random: DIN EN 60068-2-64) (Sinus: DIN EN 60068-2-6) (Shock: DIN EN 60068-2-27)

Environmental data

Temperature range	-40°C to +140°C

Tooling

Welding tool	see RN_087-14
Crimping tool	see MA_HV0104

Suitable cables

Cable Type	16 mm² (LV 216-2)
Validated Cables	**Coroplast:**
Part No.:	9-2611 / 16mm²
Type:	FHLR2GCB2G, 16mm²

Packing

Standard	for packing details see data sheets of piece parts
Weight	108,65 g/pcs

Dieses Dokument ist urheberrechtlich geschützt ● This document is protected by copyright ● Rosenberger Hochfrequenztechnik GmbH & Co. KG

Rosenberger Hochfrequenztechnik GmbH & Co. KG
P.O.Box 1260 D-84526 Tittmoning Germany
www.rosenberger.de

Tel. : +49 8684 18-0
Email : info@rosenberger.de

Coding

Housing coding	Connector	Plug coding	Plug	Plug colour	RAL	Part-Number
Z		A		red	sim. 3001	H4K135-W10016B1-ZA
		B		black	sim. 9004	H4K135-W10016B1-ZB
		C		waterblue	sim. 5021	H4K135-W10016B1-ZC

While the information has been carefully compiled to the best of our knowledge, nothing is intended as representation or warranty on our part and no statement herein shall be construed as recommendation to infringe existing patents. In the effort to improve our products, we reserve the right to make changes judged to be necessary.

Rosenberger Hochfrequenztechnik GmbH & Co. KG
P.O.Box 1260 D-84526 Tittmoning Germany
www.rosenberger.de

Tel. : +49 8684 18-0
Email : info@rosenberger.de

Dieses Dokument ist urheberrechtlich geschützt ● This document is protected by copyright ● Rosenberger Hochfrequenztechnik GmbH & Co. KG