Technical Data Sheet		Rosenberger
FAKRA - HF	RIGHT ANGLE PLUG FOR PCB	**59S20M-40MT5-Y**

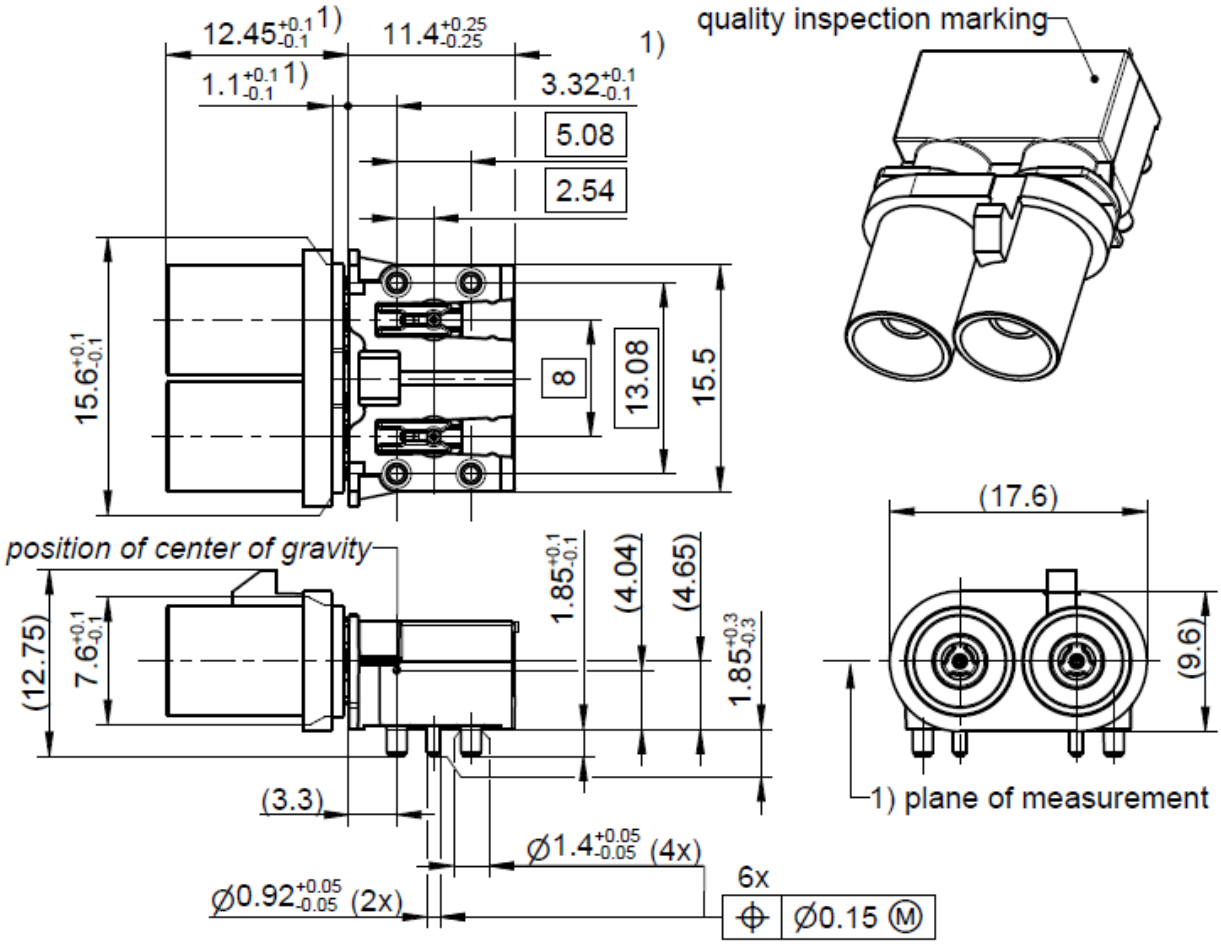

All dimensions are in mm; tolerances according to ISO 2768 m-H
Y = Part number has to be accomplished by codification

Interface

According to	ISO 20860-1

Documents

PCB layout	MB_602
Tape & reel packaging	VG331.21000

Material and plating

Connector parts	**Material**	**Plating**
Center contact	Brass	AuroDur®, gold plated
Outer contact	Zinc alloy	Tin, 2-6 µm
Dielectric	HTN	
Housing	HTN	

Rosenberger Hochfrequenztechnik GmbH & Co. KG
P.O.Box 1260 D-84526 Tittmoning Germany
www.rosenberger.de

Tel. : +49 8684 18-0
Email : info@rosenberger.de

Electrical data

Impedance	50 Ω
Frequency	DC to 6 GHz
Return loss	≥ 21dB (DC to 3GHz)
Insertion loss	≤ 0.1 x $\sqrt{f(GHz)}$ dB
Insulation resistance	≥ 1x10³ MΩ
Center contact resistance	≤ 5 mΩ
Outer contact resistance	≤ 5 mΩ
Test voltage	750 V rms
Working voltage	≤ 60 V DC
Power current	≤ 1 A DC

- Connector only, VSWR in application depends decisive on PCB layout -

Mechanical data

Mating cycles	≥ 25
Engagement force	≤ 50 N
Disengagement force	≥ 2 N
Retention force plastic housing	≥ 110 N
Coding efficiency	≥ 40 N
Weight	~ 7,6 g.

Environmental data

Temperature range	-40°C to +105°C
Thermal shock	ISO 20860-2 clause 9.2
Temperature and humidity	ISO 20860-2 clause 9.3
Vibration and mechanical shock	ISO 20860-2 clause 9.1
Dry heat	ISO 20860-2 clause 9.4
Soldering profile	acc. to IEC 60068-2-58 group3 (250°C / 30s)
RoHS	compliant

Packing

Standard	210 pcs in tape & reel

Rosenberger Hochfrequenztechnik GmbH & Co. KG
P.O.Box 1260 D-84526 Tittmoning Germany
www.rosenberger.de

Tel. : +49 8684 18-0
Email : info@rosenberger.de

Coding

Coding		Color	RAL	Part-Number
	A	black	sim. 9005	59S20M-40MT5-A
	B	white	sim. 9001	59S20M-40MT5-B
	C	blue	sim. 5005	59S20M-40MT5-C
	D	Claret violet	sim. 4004	59S20M-40MT5-D
	E	green	sim. 6017	59S20M-40MT5-E
	F	brown	sim. 8011	59S20M-40MT5-F
	G*	grey	sim. 7031	59S20M-40MT5-G
	H	violet	sim. 4003	59S20M-40MT5-H
	I	beige	sim. 1001	59S20M-40MT5-I
	K	curry	sim. 1027	59S20M-40MT5-K
	L	carmine red	sim.3002	59S20M-40MT5-L
	M*	pastel orange	sim. 2003	59S20M-40MT5-M
	N*	pastel green	sim. 6019	59S20M-40MT5-N
	Z	waterblue	sim. 5021	59S20M-40MT5-Z

** Coding on request*

Draft	Date	Approved	Date
C. Düh	06.02.2017	B. Fritz	22.02.24

Rev.	Engineering change number	Name	Date
a00	24-s064	M. Unterhuber	22.02.24

Rosenberger Hochfrequenztechnik GmbH & Co. KG
P.O.Box 1260 D-84526 Tittmoning Germany
www.rosenberger.de

Tel. : +49 8684 18-0
Email : info@rosenberger.de